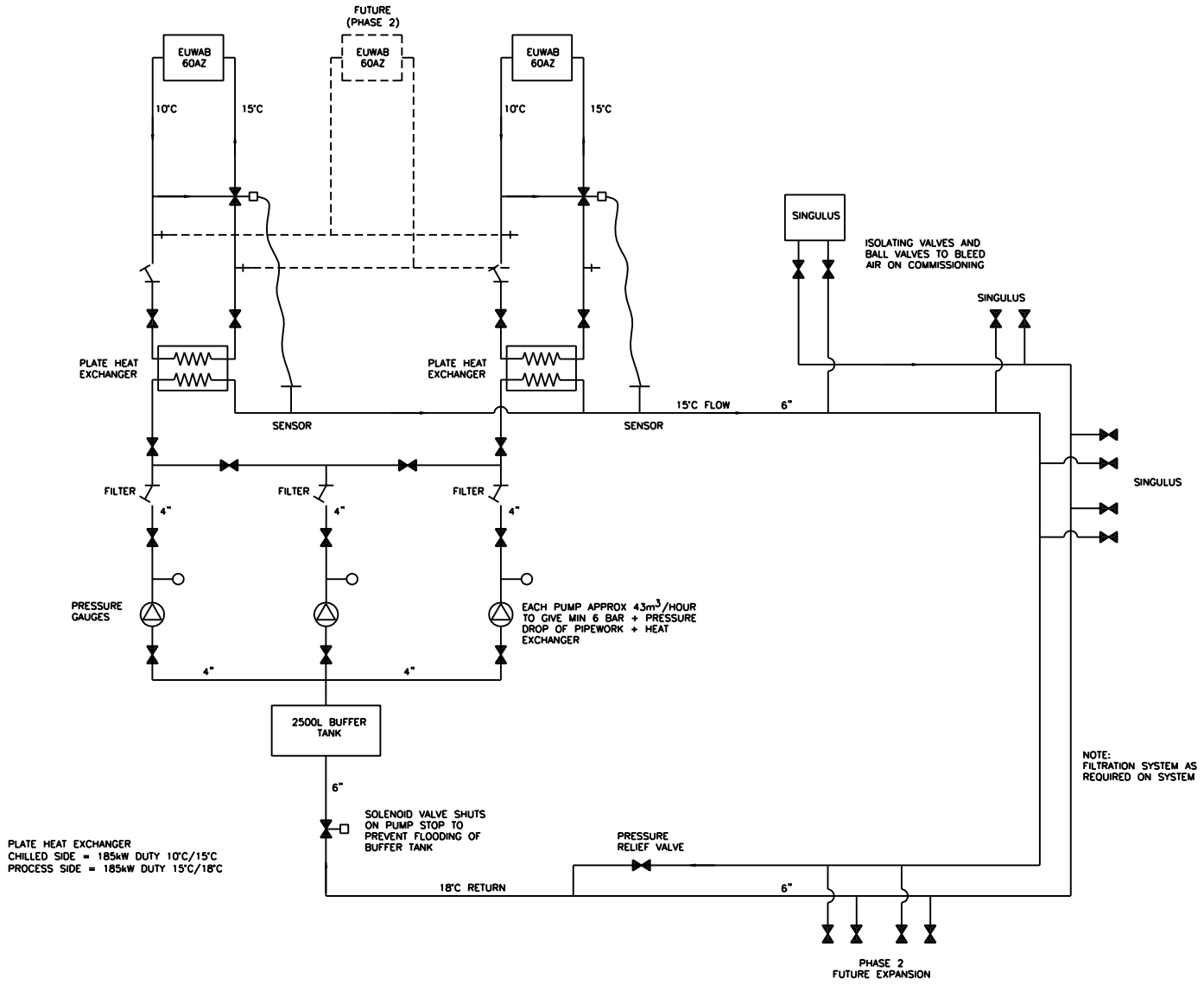

NOTES

PIPEWORK DESIGNED TO ACCOMODATE 15 LINES OF SINGULUS COPYING MACHINERY PLUS 6 LINES OF KAMMANN PRINTING MACHINERY

issue	revision	CDM risk yes / no	date

AIR options

Air Options Ltd.
Unit 14, Court Farm
Stutton Road
Brantham
Manningtree
CO11 1PW
Telephone: 0800 0188423
Fax: 0800 0188426

client

project
DVD COPYING
MECHANICAL SERVICES

title
CHILLED WATER SCHEMATIC DIAGRAM

date	scale	drawn by	checked
APRIL.2004	NTS@A2	BJB	

drawing no WL4000/942/SK1

revision